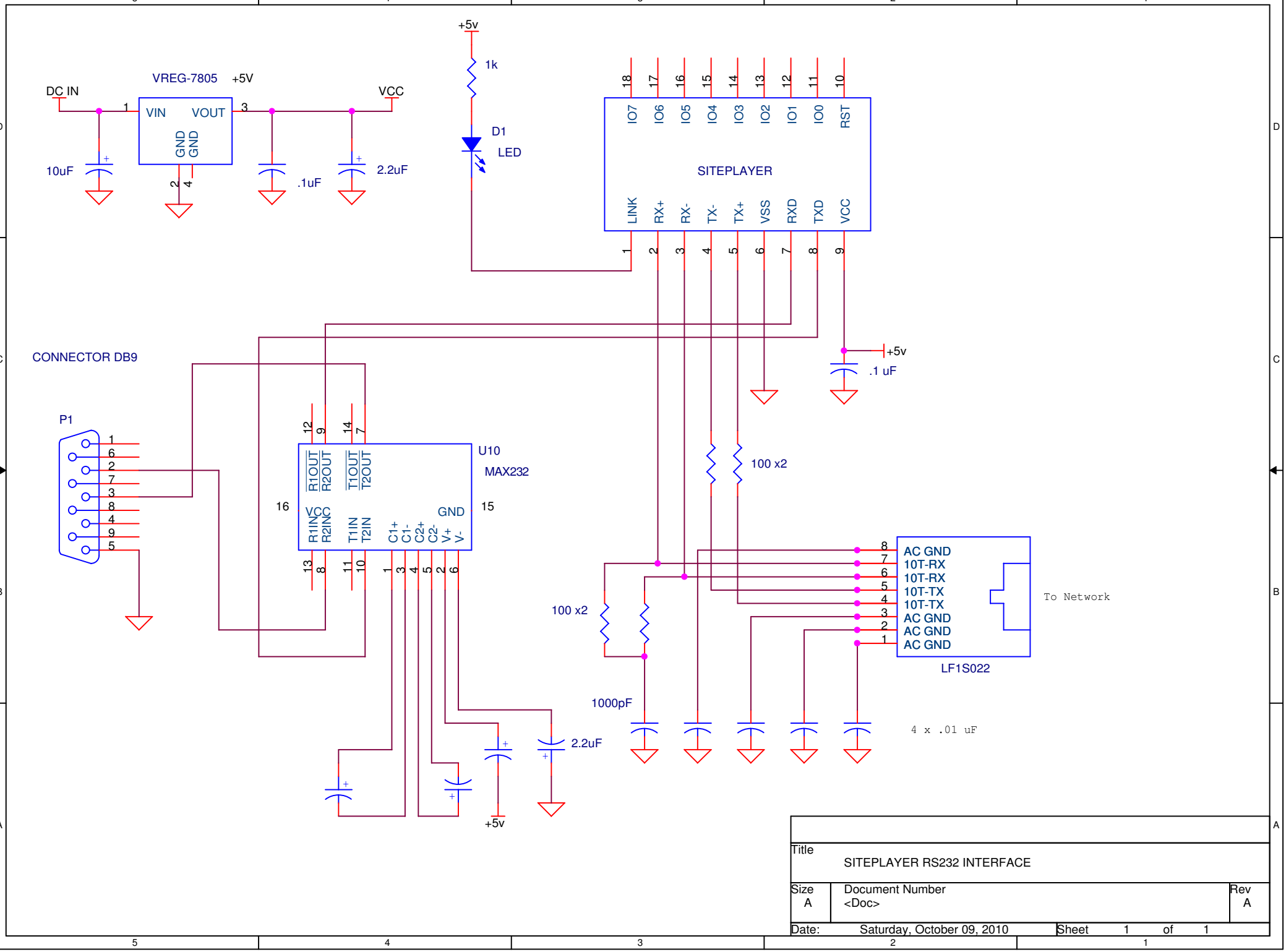
DC IN
VREG-7805
+5V
VCC
VIN
VOUT
GND
GND
10uF
.1uF
2.2uF
+5v
1k
D1
LED
SITEPLAYER
IO7
IO6
IO5
IO4
IO3
IO2
IO1
IO0
RST
LINK
RX+
RX-
TX-
TX+
VSS
RXD
TXD
VCC
.1 uF
CONNECTOR DB9
P1
U10
MAX232
R1OUT
R2OUT
T1OUT
T2OUT
VCC
GND
R1IN
R2IN
T1IN
T2IN
C1+
C1-
C2+
C2-
V+
V-
100 x2
100 x2
1000pF
2.2uF
AC GND
10T-RX
10T-RX
10T-TX
10T-TX
AC GND
AC GND
AC GND
LF1S022
To Network
4 x .01 uF
Title
SITEPLAYER RS232 INTERFACE
Size
A
Document Number
<Doc>
Rev
A
Date:
Saturday, October 09, 2010
Sheet
1
of
1