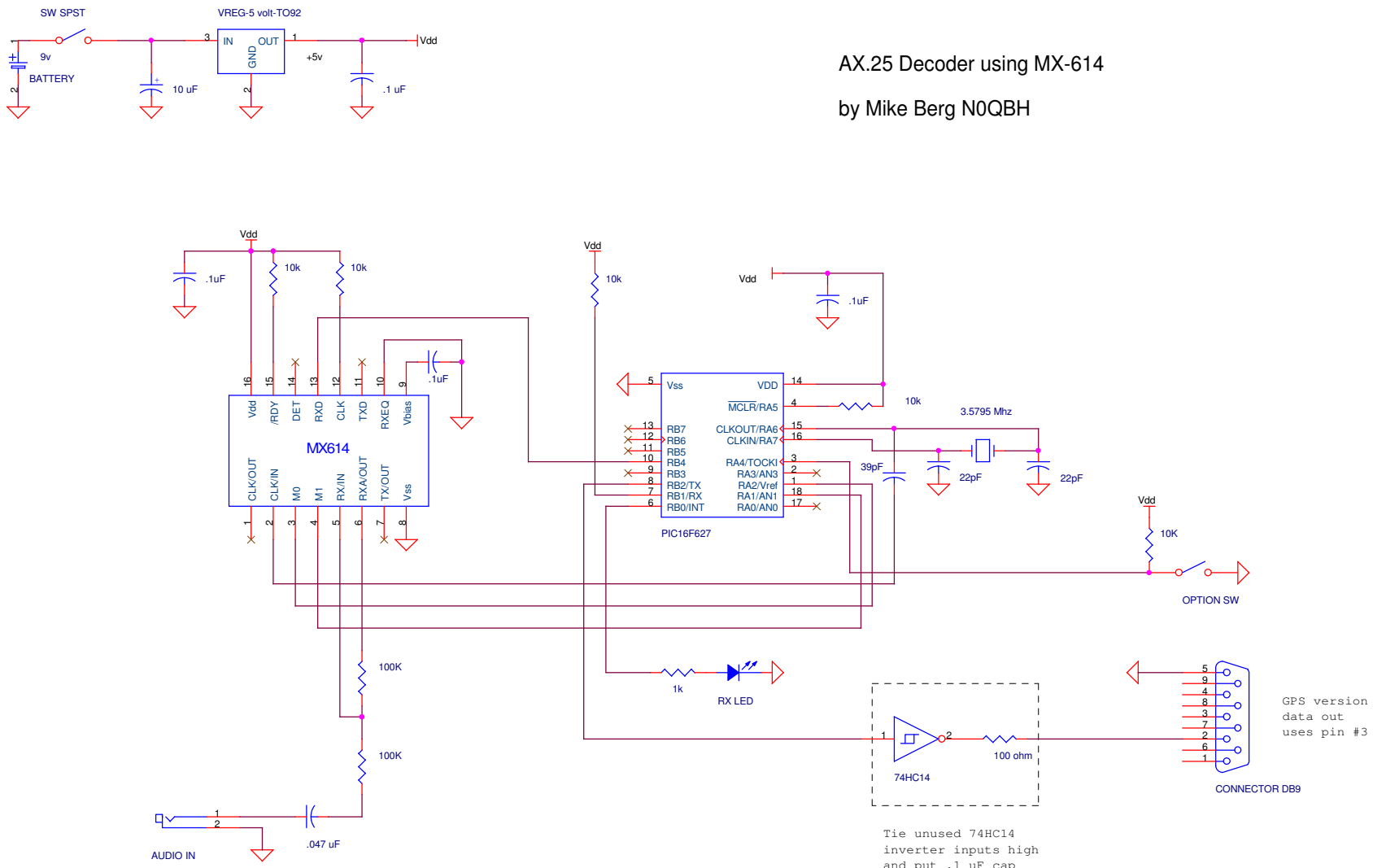
SW SPST
VREG-5 volt-TO92
9v
BATTERY
10 uF
IN
OUT
GND
+5v
Vdd
.1 uF
AX.25 Decoder using MX-614
by Mike Berg N0QBH
MX614
Vdd
/RDY
DET
RXD
CLK
TXD
RXEQ
Vbias
CLK/OUT
CLK/IN
M0
M1
RX/IN
RXA/OUT
TX/OUT
Vss
.1uF
10k
PIC16F627
VDD
MCLR/RA5
CLKOUT/RA6
CLKIN/RA7
RA4/TOCKI
RA3/AN3
RA2/Vref
RA1/AN1
RA0/AN0
RB7
RB6
RB5
RB4
RB3
RB2/TX
RB1/RX
RB0/INT
3.5795 Mhz
39pF
22pF
10K
OPTION SW
100K
1k
RX LED
74HC14
100 ohm
CONNECTOR DB9
GPS version
data out
uses pin #3
AUDIO IN
.047 uF
Tie unused 74HC14
inverter inputs high
and put .1 uF cap
across pins 7 & 14
Title
PIC 16F627 AX25 DECODER (C) 2006
Size
B
Document Number
<Doc>
Rev
P1
Date:
Friday, May 05, 2006
Sheet
1
of
1